TÜV NORD
TÜV UK Ltd.
ISO 9001

UKAS
MANAGEMENT
SYSTEMS
065

Quality products for Mechanical
& Fluid Power

04
17

FLUID POWER ACCESSORIES

jbj
TECHNIQUES
LIMITED

Contents

The details contained within this catalogue are reproduced in accordance with the latest information at going to press .....

	Page
Introduction	1
TCF & TCF/Z filling plugs with breather	2
TCF/F & TCFS filling plugs with breather	3
TCSF/Z & TMV filling plugs with breather	4
TSVV & TSFO/R breather plugs	5
TSF & TSFA oil filling plugs with breather	6
TSFT/N & TSS oil filling plugs with breather	7
PRS/F extension for oil filling plugs & TCEM magnetic oil drain plug	8
TSCM & TSCM/F magnetic drain plugs	9
FMC magnetic filter rod & FMC/LS magnetic filter with dipstick and breather	10
TC/Z threaded plug for hand tightening & TCE drain plug	11
TC tight sealing filling plug & TSC tight sealing drain plug	12
TC/F tight sealing filling plug & TSC/F tight sealing drain plug	13
TLP level indicator & IFC level gauge	14
OBLÒ inspection porthole & LVF level indicator	15
TLA & TLA/F level indicators	16
TLAX & TLAXP level indicators	17
GTSF level indicator with breather plug & T+T drain plug with thermostat	18
TCLA & TCLA/Z filling plugs with dipstick	19
TCLS & TCLS/Z filling plugs with dipstick and breather	20
ILA & ILAF level indicators with dipstick	21
ILAS & LSF level indicators with dipstick and breather	22
TFES, TFE/Z & TFES/Z female threaded caps	23
TFES/ZA female threaded cap with breather and dipstick & TFES/ZF female threaded cap with breather	24
TSVV/Z breather plug with double valve	25
TSSR & TSSRC brass breather plugs with valve	26
TSL brass filling plug with vent & LSFR brass breather plug and level indicator and internal valve	27
TC/V & TEE zinc coated closing plugs	28
TCF/V zinc coated filling plug & TCE/V zinc coated closing plug	29
TCEC/V zinc coated drain/filling plug & TCEM/V zinc coated magnetic drain plug	30
FLGV inclined flange for side applications & breather plugs on inclined flange	31
Filling plugs on inclined flange & breather plugs with level dipsticks on inclined flange	32

TCARF threaded filling cap & TCAR filler cap with breather 33
TCAR/LC lockable filling cap & TCARS filling cap with weldable flange 34
TCARI inclined filling cap 35
TRBF & TRBFS filler caps with burnished steel sleeve 36
TRBFSC & TRBF/ZK lockable filler caps with burnished steel sleeve 37
TRBFS/A filling cap with burnished steel sleeve and breather & TRTCSF/Z breather and filling plug 38
TRBFS/LG & TC/ZLG visual level indicator with float system 39
LGF68 level indicator with float system & GLVS vertical level gauge 40
GLV vertical level gauge & GLVE level indicator with electrical contacts 41
GLVX vertical level indicator with pyrex glass tube & PL vertical level gauge 42
PLT & PLTB level gauges with thermometer 43
LV level gauge and LV-T & LV-TS level gauges with thermometer 44
LV/EF1 level gauge with level warning and LV/EF-S1-S2-S3 level gauge with low level sensor and sliding contacts . . 45
LV/E-S1-S2-S3 level gauge with sliding contacts and LV/EF-S1-S2-S3 level gauge with low level sensor/sliding contacts 46
LV Mignon level gauge 47
LUN & LMU level gauge 48
LUN+IE/1 & LMU+IE/2 level gauges in metal with electro-magnetic control switch 49
SM magnetic probe plug 50
Hygroscopic breather filters . . . . . 51 - 56
Pressure switch KT 32/33/34 57
Pressure switch KT 35 58

GLVX / Vertical level indicator with double thread, with pyrex glass and protection.

Vertical level indicator with double thread to control fluid level. Realized with aluminium light alloy little blocks, transparent tube made in pyrex glass and Viton O-Rings. Suitable for low and high temperatures -20°C + 200°C max. Recommended pressure: 2 bar.
Supplied complete with protection.

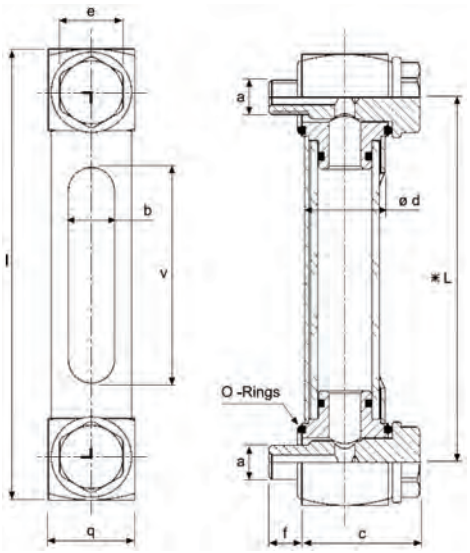

GLVX / Vertical level indicator with double thread, with pyrex glass and protection										
Type	a	L*	e	q	d	c	f	v	b	l
GLVX1G	3/8"	127	22	30	28	43	10	75	16	157
GLVX2G	3/8"	254	22	30	28	43	10	202	16	284
GLVX1M	10 x 1.5	127	22	30	28	43	10	75	16	157
GLVX2M	10 x 1.5	254	22	30	28	43	10	202	16	284
GLVX3M	12 x 1.75	127	22	30	28	43	10	75	16	157
GLVX4M	12 x 1.75	254	22	30	28	43	10	202	16	284

PL/Vertical level gauge

Used for checking fluid level in tanks. Complete with seals, screws and back nuts. Used for checking fluid level in large tanks. Protection in anodized aluminium alloy and transparent part in polyamide. Complete with seals, screws and anchor nuts. Easy to assemble, it gives a tolerance of 0,5 mm along the distance of holes, maintaining a perfect seal. Avoid contact with alcohol, toluene, glycol and paints on the transparent part.

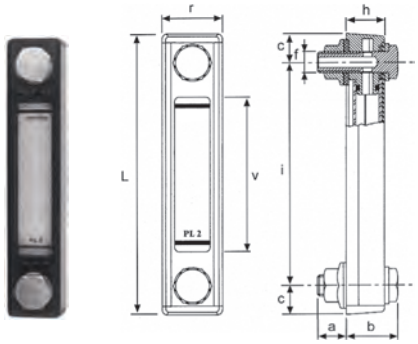

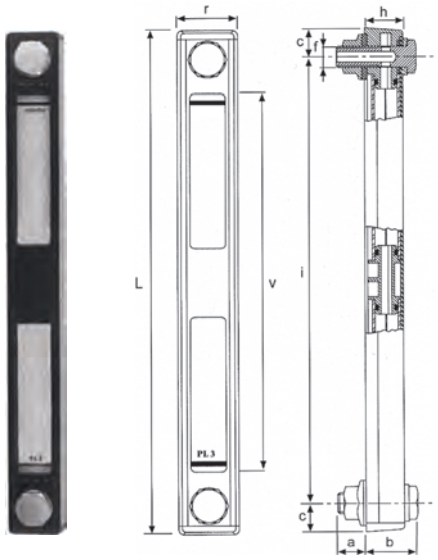

PL/Vertical level gauge									
Type	L	r	v	c	i	f	h	a	b
PL1	109	34	37	16,5	76	M 10	21,5	11	29
PL1	109	34	37	16,5	76	M 12	21,5	11	29
PL2	160	34	88	16,5	127	M 10	21,5	16	29
PL2	160	34	88	16,5	127	M 12	21,5	16	29
PL3	287	34	215	16,5	254	M 12	21,5	16	29

PLT/Vertical level gauge with thermometer.

Used for checking fluid level in large tanks. Protection in anodised aluminium alloy and transparent part in polyamide. Complete with seals, thermometer, screws and anchor nuts. Easy to assemble, it gives a tolerance of 0,5 mm along the distance of holes, maintaining a perfect seal. Avoid contact with alcohol, toluol, glycol and paints on the transparent part. Working temperature: 0°C + 80°C max. Pressure: 2 bar max. Torque: 10 Nm max.

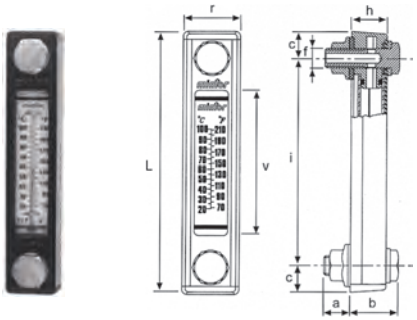

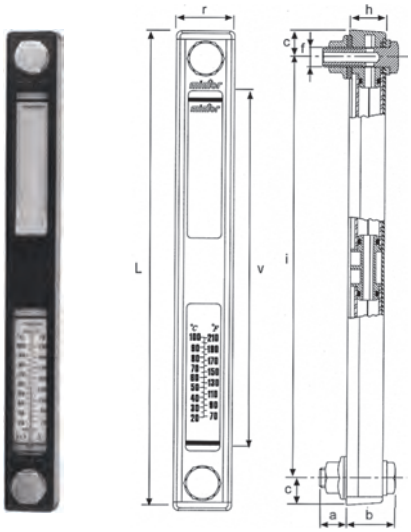

PL/Vertical level gauge									
Type	L	r	v	c	i	f	h	a	b
PLT1	109	34	37	16,5	76	M 10	21,5	11	29
PLT1	109	34	37	16,5	76	M 12	21,5	11	29
PLT2	160	34	88	16,5	127	M 10	21,5	16	29
PLT2	160	34	88	16,5	127	M 12	21,5	16	29
PLT3	287	34	215	16,5	254	M 12	21,5	16	29

PLE / Vertical level indicator with electrical contact.

Used for the control of the fluid for tanks. Protection in black anodised aluminium alloy and transparent part in polyamide. The electrical sensor indicates through a visual signal the attainment of the minimal level of the fluid. The contacts are normally opened, they close to the attainment of the minimal level. Supplied complete with connector and 2.5 m cable. Electrical characteristics: Electrical protection: as per norm IP67 -Maximum load on the electrical contacts: AC to 250 Volt - 0,5 Amp, DC to 250 Volt - 0,5 Amp. Concurred liquid specific weight: min. 0,80 kg/dm³. For further information please request the electrical plan. Avoid contacts with alcohol, trichloroethylene, solvents and paints on transparent window.

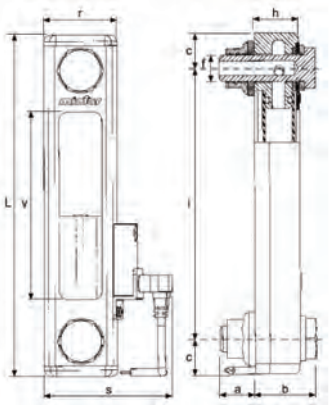

PLTB/Vertical level gauge with bimetallic thermometer										
Type	L	r	v	c	i	f	h	a	b	s
PLE2	160	34	88	16.5	127	M12	21.5	16	29	59
PLE3	287	34	215	16.5	254	M12	21.5	16	29	59

LV Visual level gauges.

Visual level indicators provide the ability to clearly and precisely check liquid levels within fluid reservoirs. Available with integrated valves which interrupt the flow to the gauge and allow oil sampling to take place without opening the tank or breaking into any supply lines. Manufactured with glass fibre reinforced heads and acrylic tube as standard. (Polypropylene heads and “Pyrex” glass tubes for high temperatures or applications where aggressive fluids are present) Supplied to suit installations with minimum centres of 100m up to a maximum of 4000mm.

Example:- LV-300-M12 for level gauge in standard materials with fixing centres of 300mm and utilising M12 fixing screws

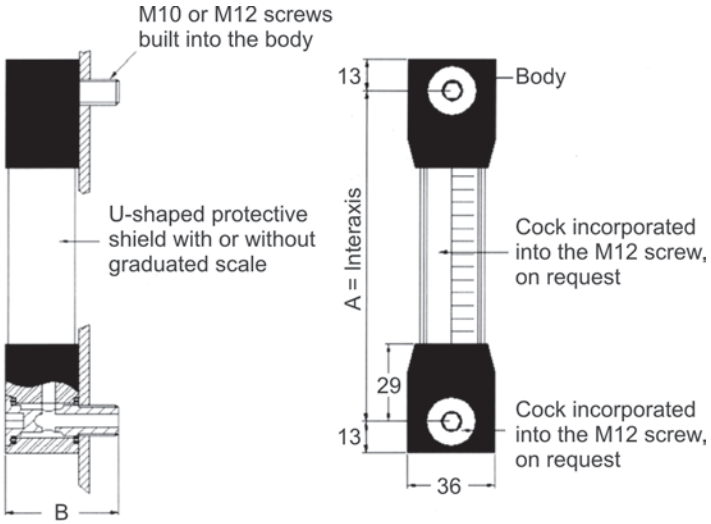

LV-T/LV-TS with thermometer or temperature probe.

LV-T Visual level indicators, manufactured to the ‘LV’ standards but with integrated thermometer graduated with double scale (0°- 100°C/210°F) LV-TS Supplied as per the LV version but with integrated bi-metallic temp. probe incorporated within the tank fixing screw. The body of the probe is a 40 mm. Dia. chrome plated gauge with graduated scale from 0° - 120°C and has a bulb length of 70 mm.

Examples:- LV-T-1000-M10, Level gauge with integrated thermometer with fixings centres of 1000 mm and M10 connection screws.
LV-TS –1000-M10 as above but with Bi-metallic temperature probe.

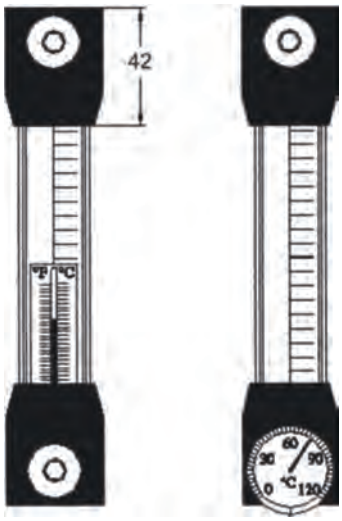

LV/EF1 Level gauge with low level warning signal.

Based upon the LV series level gauges but supplied with a fixed contact in the lower cap which provides a minimum level signal. Polarity of the switch must be confirmed at point of order. 'NC' normally closed contacts in the presence of fluid, 'NO' normally open contacts in the presence of fluid.

Example:- LV-EF1-NO-500-M12, Visual level gauge complete with 1 off normally open contact switch.
Gauge has M12 fixings on 500mm centres.

Patent No:- 19845A/90

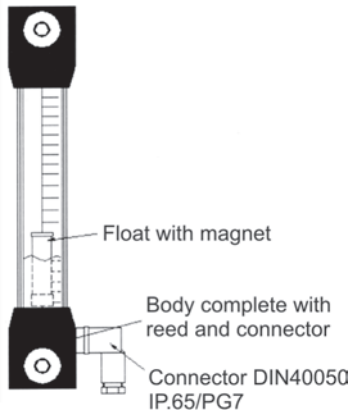

LV/EF-S1(S2,S3) Level gauge with fixed low level sensor + additional sliding contacts.

Visual level indicator, as per LV/E-S1 series but supplied with additional fixed low level switch. Polarity and position of each switch must be specified at point of order.

Example:- LV-EF1NO-S1NC-(S2NO)-(S2NC)-1500-M12. Visual level gauge with fixed low level sensor and additional sliding contacts. Gauge with M12 fixings on 1500mm centres.

Patent No. 19845A/90

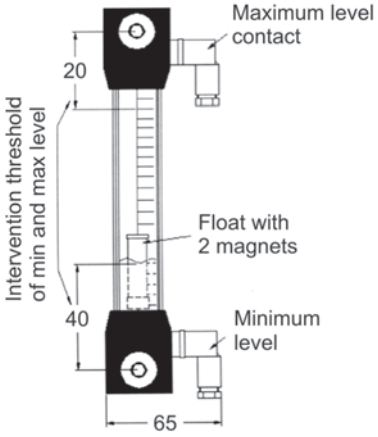

LV and LV/E2 electrical characteristics			
	Minimum level contacts (Standard)	Contacts on request	
Electrical characteristics			
Commutable power in D.C.	20 W	50 W	20 W
Commutable power in A.C.	20 VA	50 VA	20 VA
Strength of current in D.C. - A.C.	1 A	3 A	1 A
Commutable voltage	200 V	220 V	150 V
Temperature range - acrylic tube	-20 +70°C	-20 +70°C	-20 +70°C
Temperature range - Pyrex ® tube	-20 +100°C	-20 +100°C	-20 +100°C

LV/E-S1(S2,S1) Level gauge with sliding contacts)

Sight level gauge, similar to LV-EF series, but with sliding contacts. The contacts being actuated when the float passes through the contact area and will only reverse when the float passes in the other direction. Polarity and position of each switch must be specified at point of order.

Example:- LV-E-S1NC-(S2NO)-(S3-NO)-1000-M12.. Visual level gauge with sliding contacts, S1 normally closed, (S2 &S3 normally open) Gauge has M12 fixings on 1000mm centres.

Patent No. 19845A/90

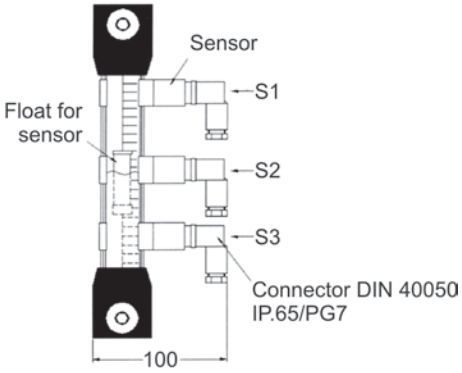

LV/EF-S1(S2,S3) Level gauge with fixed low level sensor + additional sliding contacts.

Visual level indicator, as per LV/E-S1 series but supplied with additional fixed low level switch. Polarity and position of each switch must be specified at point of order.

Example:- LV-EF1NO-S1NC-(S2NO)-(S2NC)-1500-M12. Visual level gauge with fixed low level sensor and additional sliding contacts. Gauge with M12 fixings on 1500mm centres.

Patent No. 19845A/90

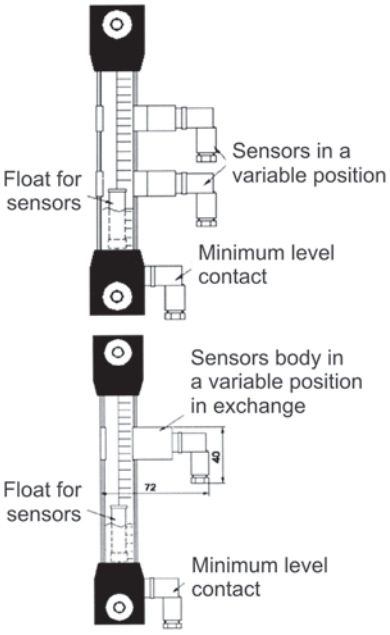

LV/E and LV/E1 electrical characteristics			
	Minimum level contacts (Standard)	Contacts on request	
Electrical characteristics			
Commutable power in D.C.	20 W	50 W	20 W
Commutable power in A.C.	20 VA	50 VA	20 VA
Strength of current in D.C. - A.C.	1 A	3 A	1 A
Commutable voltage	200 V	220 V	150 V
Temperature range - acrylic tube	-20 +70°C	-20 +70°C	-20 +70°C
Temperature range - Pyrex ® tube	-20 +100°C	-20 +100°C	-20 +100°C

LV Mignon visual level gauge

Interchangeable unit to other manufactured units with standard mounting centres of 76, 127 & 254 mm. Aluminium U-shaped profile offers good protection from impact. Low height fixing points ensure an excellent viewing of the fluid height. Various alternate materials offer flexible solution to the most stringent applications.

Examples of request:

1) LV/M - 76 - M12, standard level, interaxes = 76 suitable for oil, petroleum, water, etc.

2) LV/M 127 - M12, body in polypropylene, tube in polyvinyl chloride, screws in stainless steel. Suitable eg. for caustic soda diluted in water in a percentage not lower than 50% and at a temperature not higher than 60°C.

3) LV/M - 254 - M10, body in anodized aluminium, tube in Pyrex®, o-ring in Viton®. Suitable for liquids having temperatures higher than 70°C.

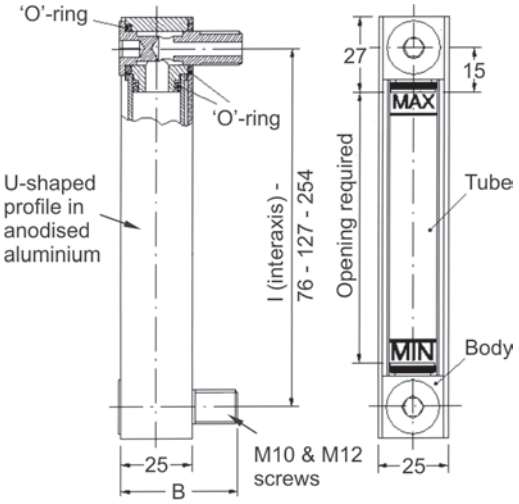

LUN & LMU visual level gauge

Visual level gauge manufactured to customer specification and available with fixing centres between 150 – 4000mm and 3/8” BSPP fixings.

Supplied in either single or double fixing mode.

Fluid sampling valve or temperature probe available on request.

Special materials available for applications with aggressive fluids

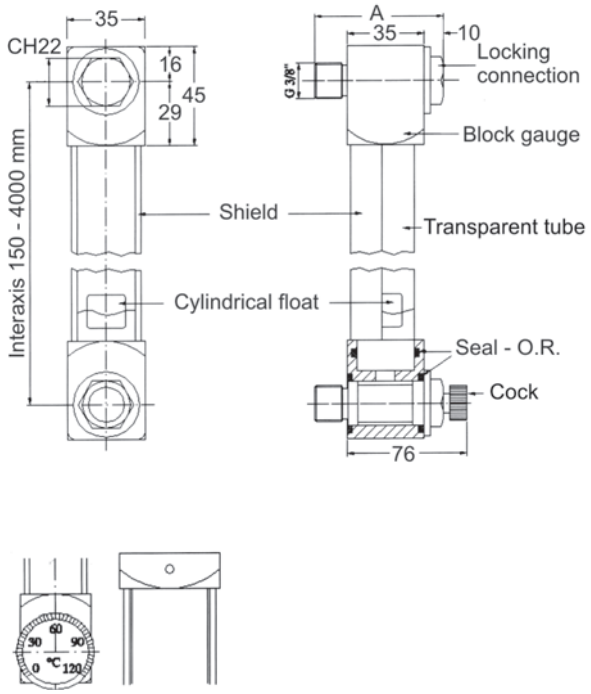

Types	Tube		Block Gauges			Cock	Thermometer	O-ring			Screw 3/8" Gas		
	Acrylic	Pyrex® Glass	Nylon - Glass	Anodized Aluminium	Stainless Steel 316			Oil Tight	Viton®	E.P.D.M	Nickel - plated brass		Stainless Steel 316 A = 58
											A = 58 mm	A = 68 mm	
LUN	●		●				●	●	●	●	●	●	●
LUN/P		●	●				●	●	●	●	●	●	●
LUN/R	●		●			●		●	●	●	●	●	●
LUN/P/R		●	●			●		●	●	●	●	●	●
LMU	●			●	●		●	●	●	●	●	●	●
LMU/P		●		●	●		●	●	●	●	●	●	●
LMU/R	●			●	●	●		●	●	●	●	●	●
LMU/P/R		●		●	●	●		●	●	●	●	●	●

of standard production

Visual level gauges in metal with electromagnetic control switch of minimum level or of minimum and maximum level.

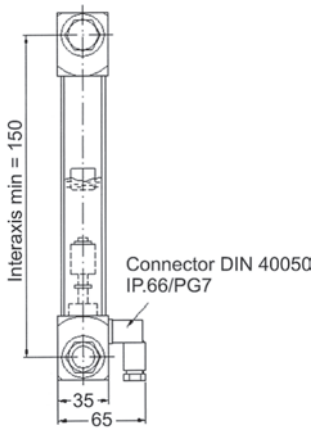

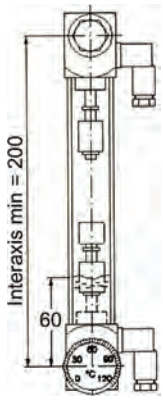

These level gauges offer double control, visual and electromagnetic of the liquids in the tanks. They provide the ability to send a light or acoustic signal to actuate or interrupt the electrical circuit it is connected to.
The electromagnetic control can be of minimum *or* of maximum level, or of minimum *and* maximum level.
Our electromagnetic levels are suitable for oil-dynamic exchanges, tanks containing water, gasoil, mineral oils having a viscosity not higher than 600 cSt and all other liquids, except for acids or lammable substances.

When the loat of the indicator meets the reed switch incorporated into the tube at the prearranged distances, the contacts, being stressed by the magnet housed in the loat, open or close. Also S.P.D.T. (exchange or switchover) contacts are forseen.

Both series differ from each other in the number of electric contacts. In the most complete type (LMU+IE/2) there are two contacts and precisely of minimum and of maximum level.
The visual and electromagnetic levels can be supplied with interaxis ranging from 150 to 4000 mm with tube in acrylic alloy. These can be itted with bimetallic probe-thermometer having a length of 70 mm with body in chrome-plated melting brass Ø 40 mm, scale from 0 to 120°C. Thermometer incorporated into the locking connection.

The electromagnetic level is incorporated in the joint block gauge, the electric connector on the side of the lower block gauge if the level is only of minimum of the upper block gauge if it is only of maximum on both block gauges if it is of minimum and of maximum. In order to have the connector in the most suitable position to connect the wires, right or left side, it is suficient to have the shield or screen rotated by 180°. Tubes in acylic or Pyrex®. 3/8'' GAS or M12 threaded locking screws in nickel plated brass.

Note: When ordering it is important to specify whether the contacts must be N.O. (normally open) or N.CH. (normally closed) incase of absence of liquid.
On request the contacts can be S.P.D.T (exchange)

Electrical characteristics		
Commutable power in D.C.	50 W	20 W
Commutable power in A.C.	50 VA	20 VA
Strength of current in D.C. - A.C.	3 A	1 A
Commutable voltage	220 V	150 V
Temperature range - acrylic tube	-20 +70°C	-20 +70°C
Temperature range - Pyrex ® tube	-20 +100°C	-20 +100°C

Types	Tube		Block Gauges			Optional	O-ring			Screw 3/8'' Gas	
LUN	Acrylic	Pyrex® Glass	Aluminium	Nickel Plated Aluminium	Anodized Aluminium	Cocks Thermometers	Oil Tight	Viton®	E.P.D.M	Nickel Plated Brass	Stainless Steel 316
LMU/P/R											

of standard production

SM Magnetic probe plug

Constructed with Aluminium hexagonal head and steel rod.
Supplied with one or more magnetic elements as required.
'A' dimension to be specified when ordering. Hexagonal head also available in steel.

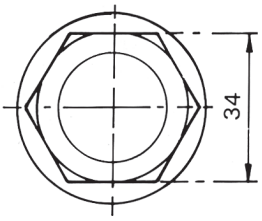

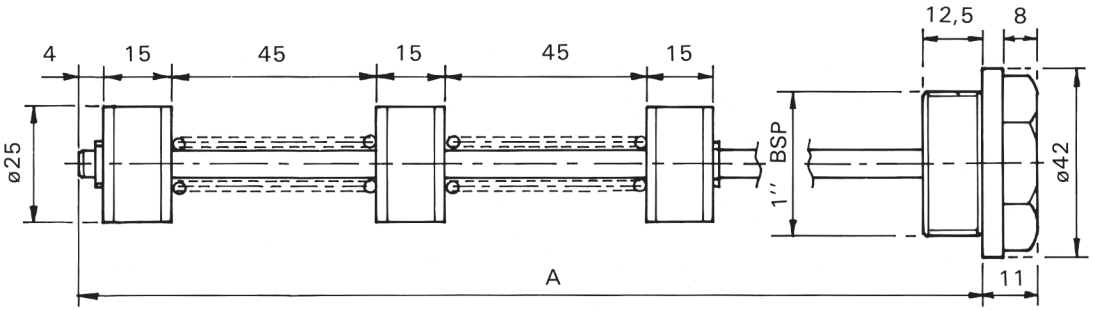

Achieve maximum machine performance.

Use a unique filtration process to treat the cause not the symptom . . . remove moisture and particles before entry to the system.
Moisture and particle accumulation are major factors of oil contamination in industrial equipment. Neglected, these detriments restrict equipment efficiency, causing machine downtime and significant expense in replacement oil, parts and repair labour. Des-Case hygroscopic breathers incorporate a proven, field tested design. They prevent water and contaminates from entering fluid reservoirs as differential pressures occur through thermal expansion and contraction of the fluid, or during the filling or emptying process.
Manufactured with a hygroscopic agent, they have the capability to extract water vapour from the air as it is drawn through the unit. Accompanying solid particles are then removed by a patented polyester fabric filter, allowing only clean, dry air to enter the system.

Change To Our Hygroscopic Breathers For Maximum Machine Performance

These hygroscopic breather elements are state-of-the-art in design and function and are industry's best choice for assuring maximum machine performance.
Cost saving benefits:

- Elimination of water contaminated oil which prevents additive stripping
- Elimination of rust forming due to condensation
- Elimination of sludge deposits
- Less abrasive particles, to prolong machine operating life
- Longer oil and oil filter life

Resilient Construction, Multiple Application.
Every hygroscopic breather is manufactured in a durable, shock absorbing clear plastic casing with resilient qualities to withstand the customary abuse associated with heavy manufacturing equipment. The units are disposable and are manufactured entirely from environmentally safe components.
Our disposable hygroscopic breathers are manufactured in three sizes to accommodate different mounting space requirements. All three models are rated for 20 cfm of air in and out of the tank or reservoir, the equivalent of 125gpm fluid level change in the tank.
The patented air flow design produces a partial regeneration of the hygroscopic agent and a backflushing of the particles filter when the air leaves the reservoir.

Our other hygroscopic breather products include tank breathers for large storage and process tanks, steel breathers for rugged and corrosive industrial environments and the DC-1 and button breathers for small applications.

	Features	Benefits	Environment & Applications
Disposable	Foam Pad PatentedPolyester Filter Silica Gel/Desiccant AirIntakePlug Ring DifferentSizes	Dispersesairevenlyoverfiltermediaandsilica gel Captures particlesassmallas0.5micron (73.5% efficiency),3-micronabsolute/ß3>200 Removes moisturefromincomingair,extending fluid andsystemlife Allows foreasyactivationoftheunitwithout tools & controlledbreathing Allowsforadaptationtovirtuallyanysystem	*Intermittent operations* Gearboxes Hydraulic Reservoirs Transformers Storage Tanks Totes
Hydroguard™	Foam Pad PatentedPolyester Filter Silica Gel/Desiccant Expansion Chamber DualCheck Valves	Stopsoilmistduringexhalation. Dispersesairevenlyoverfiltermediaandsilicagel Captures particlesassmallas0.5micron (73.5% efficiency),3-micronabsolute/ß3>200 Removes waterfromincomingair,extendingfluid andsystemlife. Creates a nearlysealedsystem Providesslightsystempressurisation, protects systemintegrity	*Thermal expansion/contraction only* HighHumidity Gearboxesandotherlowflow applications Pumps Storagedrums,Totes Washdownapplications Closed loopsystems
Ventguard™	Same featuresandbenefitsas*Hydroguard*™but smallerfootprint		Pumps,Smallgearboxes
TriplePlay™ **DoublePlay™**	Pleatedfilter element Hydrophobic media Oilcoalescing media (*TriplePlay*™on ly) VacuumIndicator (optional)	Large surfacearea,blocksparticlesassmall as 1-micron(99.5%efficiency),/ß1>200 Repels freewater,yetpermitshumidairto escape Drains oilbacktosystem,prevents contamination ofworkenvironment. Actuateswhenmaximumrestrictionis reached, protectssystemintegrity	Low humidityapplications Continuous operationswithfrequent washdowns. Applications thatcreateoilmisting Arid, highdustenvironments
DisposableSteel Breather	Foam pad Microglassmedia Silica gel/desiccant Optionalflapper valve adaptor Metalhousing VisualIndicator	Dispersesairevenlyoverfiltermediaandsilica gel Removesparticlesassmallas0.5micron (73.5% efficiency),1-micronabsolute/ß1>200 Removes waterfromincomingair,extending fluidandsystemlife Optimizes breatherlongevity	Harsh environments High temperature Mobileequipment Nauticalapplications

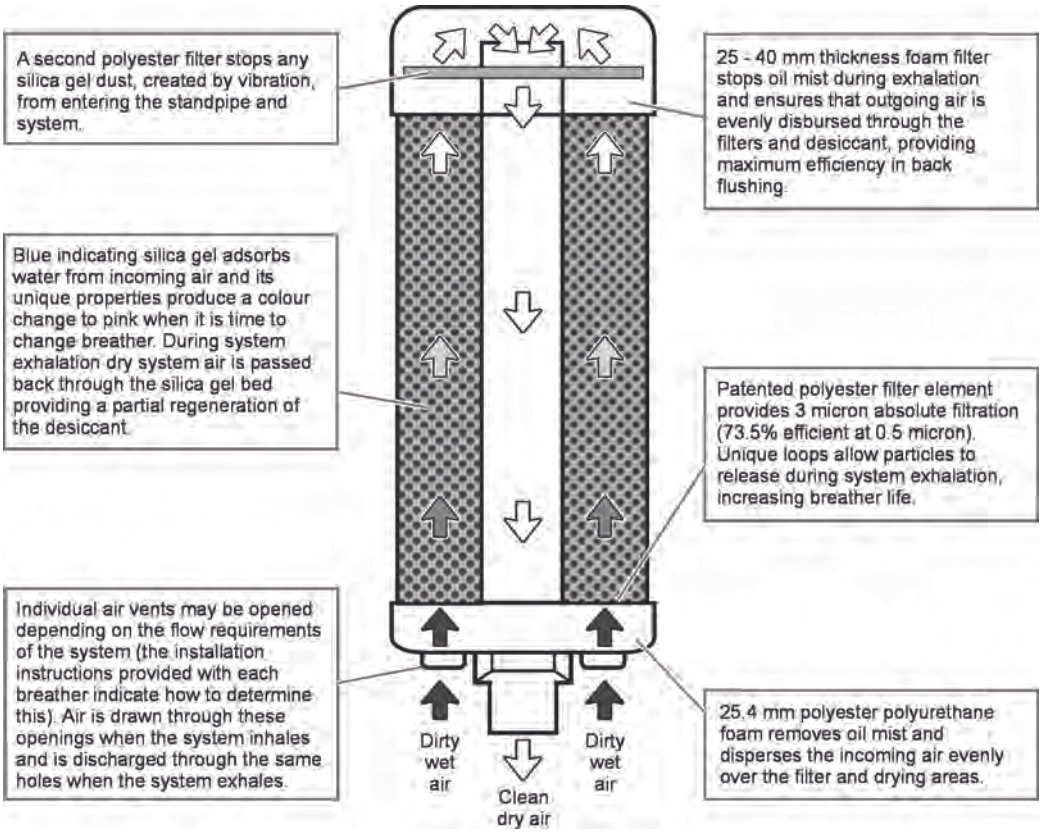

Type	Standard Disposable			Miniature Disposable			HydroGuard™	VentGuard™		DoublePlay™ TriplePlay™		Disposable Steel
Model	**DC-2**	**DC-3**	**DC-4**	**DC-BB**	**DC-1**	**DC-OC2**	**DC-HG-8**	**DC-VG-1**	**DC-VG-4**	**DC-SB-25**	**DC-SB-35**	**DC/DS-6**
Height (mm)	155	205	260	76.2	127	63.5	203	127	203	127	127	165
Diameter (mm)	101.6	101.6	101.6	69.9	69.9	66.7	127	69.9	89	127	127	127
Filtration Area (mm^2)	723	723	723	266	266	200	723	266	266	11.6	11.6	245
Amount of Silica Gel (kg)	0.45	0.68	0.91	0.057	0.113	x	0.41	0.136	0.136	N/A	N/A	0.680
Adsorption Capacity (ml)	165.61	236.59	354.88	12	24	N/A	-	29.6	29.6	N/A	N/A	266
Maximum Flow Rat (cfm @ 1 PSID)	16	16	16	3	3	7	Contraction Only	1 cfm @ 1.5 PSID		40	40	20 cfm @ 1.5 PSID
Filtration (μ absolute)	3	3	3	3	3	3	3	3	3	1	1	1
Operational Temperature Range (°C)	-50°C to 100°C			-29°C to 93°C			-29°C to 93°C			-29°C to 9°C3		-28.9°C to 121.1°C
Hydrophilic Agent	Silica Gel			Silica Gel			Silica Gel			N/A		Silica Gel
Filter Media	Polyester			Polyester			Polyester			Polyester		Microglass
Connection Size (NPT)	1"	1"	1"	3/8"	3/8"	3/8"	1"	3/8"	3/8"	1"	1"	Varing depending on adaptor

Model	Diameter (mm)	Height (mm)	Flow Rate CFM Rating	Water Adsorption (l)	Accessories	
Disposable Desiccant Breathers						
					Model	**Description**
DC-2	101.6	155.6	16	0.13	Des-Case standard disposable breathers retain particulate as small as 0.5 micron (73.5% efficiency) or 3 micron absolute are rated for 16 cfm and feature a 1" threaded standpipe	
DC-3	101.6	206.4	146	0.23		
DC-4	101.6	257.2	16	0.35		
					DC-10	Threaded adaptors
					DC-11	Clamps
					DC-12	Field Adaptors
					DC-12T	1" NPT female threaded field adaptor
					DC-15	Flange adaptors
					DC-15T	1" NPT female threadedbrass flange adaptors
					DC-16	Flexihose
					DC-17T	1" NPT female ¾" NPT male adaptor
DoublePlay™ Contamination Control Breathers						
DC-SB-25	127	127	40		The DoublePlay™ breather incorporates a 1" NPT threaded mounting design for easy adaption to any size reservoir opening with adaptor or reducer options. Optional visual vacuum indicator option actuates when maximum restriction has been reached	
Hydroguard™ and VentGuard™						
DC-HG-8	127	203.2		118.5ml	The Hydroguard™ breather handles air volume caused by thermal expansion and contraction only. The unit incorporates a 1" standpipe slipfit design for easy adaptation to any size reservoir opening. The VentGuard™ has all the same qualities of the Hydroguard™ but in a smaller footprint that makes it ideal for pumps and small gearboxes.	
					DC-10	Threaded adaptors
					DC-11	Clamps
					DC-12	Field Adaptors
					DC-15	Flange Adaptors
					DC-16	Flexihose
Disposable Steel Breathers						
DC/DS-6	127	165	20	266ml	**An adaptor is required. Please choose from various size options**	
					DC-DSA10	1" Threaded Adaptor
					DC-DSA17	¾" Threaded Adaptor
					DC-DSV5	Flapper Valve Adaptor
Miniature Desiccant Breathers						
DC-BB	69.9	76.2	3.5	11.83ML	All units feature a 3/8" NPT male threaded standpipe for easy replacement of factory installed breather caps.	
DC-1	69.9	127	3.5	23.66ML		
DC-OC2	66.7	63.5	5.0	n/a		
Steel Breathers						
DC/CS-4	182.88	254		0.4	The 1 micron pleated filter has a very large surface area, resulting in long service life. Like the bag filter, it is easily replaced without removing the breather from service. The steel breathers accommodate large air flow rates with minimal pressure drops Since all Des-Case steel breathers are designed with standard NPT pipe threads for mounting, these units can be installed in nearly any application with reducers, adaptors, etc, available at any local plumbing or hardware supply.	
DC/CS-6				1.1		
DC/CS-10				3.1		
DC/CS-20				6.2		
DC/CS-30				9.3		
					DC-4D	Desiccant bag filter
					DC-6D	Desiccant bag filter
					DC-10D	Desiccant bag filter, 2 bads needed for DC/CS 20 and 3 bags for DC/CS 30
					DC-4F/1	Pleated filter element
					DC-6F/1	Pleated filter element
					DC-10F/1	Pleated filter element (1 element for DC/CS 10, 20, 30)
					DC-12-4C	Threaded Adaptor
					DC-12-6C	Threaded Adaptor
					DC-12-10C	Threaded Adaptor (1adaptor for DC/CS 10, 20, 30)
Oil Coalescing Breathers						
DC-SB-35	127	127	40	n/a	The Des-Case DoublePlay™ and TriplePlay™ breathers incorporate a 1" NPT threaded mounting design for easy adaptation to any size reservoir opening with adaptor or reducer options. The Des-Case DC-OCD-14 steel unit is designed with standard NPT pipe threads for mounting.	
DC-OCD14	406.4	812.8	250	2.5ML		

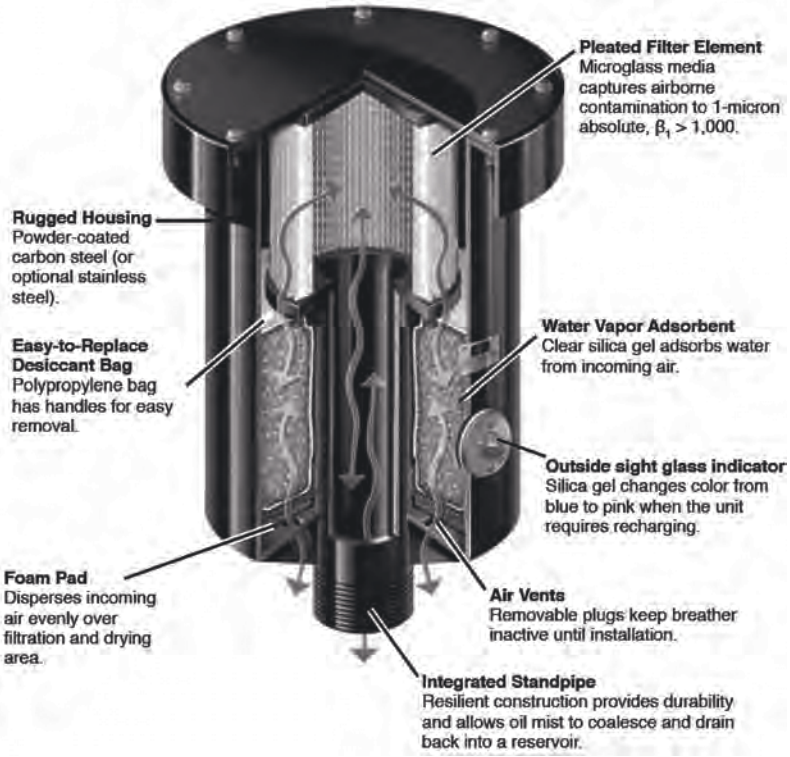

How The Product Works

As wet, dirty air is drawn through the unit, a 1-micron microglass pleated ilter element removes solid particulate and the hygroscopic agent extracts moisture.

When the air is expelled from the container, the foam pad cleans itself by releasing dirt back into the atmosphere.

The hygroscopic agent is partially reactivated by the dry air passing back through, thereby permitting longer periods between recharging or replacing.

Features	Benefits
Integrated Standpipe	Resilient construction provides durability and allows oil mist to coalesce and drain back into a reservoir
Pleated Filter Element	Replaceable polyethylene microglass filter prevents particles to 1- micron absolute from entering the system.
Silica Gel/ Desiccant	Easy to replace desiccant bags remove moisture from incoming air, extending fluid and system life.
Carbon Steel or Stainless Steel Housing	Handles high temperature and extreme environments, prevents corrosion
Various Sizes	Adaptation to virtually any system.

Model Number	DC-RS-3	DC-RS-5	DC-RS-9	DC-RS-15	DC-RS-25	DC-RS-50	DC-RS-75	DC-RS-100	DC-RS-150	DC-RS-200
Height (mm)	292	349	464	489	571	794	1010	787	933	1086
Width	2572	2572	2572	3937	3937	3937	3937	5969	5969	5969
Connection Size (NPT)	2"	2"	2"	3"	3"	3"	3"	4"	4"	4"
Amount of Desiccant (kg)	1.36	2.27	4.08	6.80	11.34	22.68	34.02	45.36	68.04	90.72
Flow rate at 0.5 PSID (cfm)	85	85	80	205	140	115	80	270	250	240
Approximate Dry Weight	7.26	9.07	12.25	22.23	29.03	45.36	65.32	86.18	114.76	142.88
Adsorption Capacity (l)	0.54	0.90	1.62	2.7	4.5	9.0	13.5	18.0	27.0	36.0
Operating Temperature	-29° to 104°C									

- Large PVC tank breathers protectchemicals in storage or process tanks.
- Handles extreme temperatures and weather conditions.
- Accommodates airlow rates up to 900 cfm.
- Bi-directional airlow.
- Multi-tiered iltration process.
- Water vapor adsorbent.
- Sight glass indicator for easy system monitoring.
- Rebuildable.

Model Number	DC-6-2-12	DC-6-2-18	DC-10-2-18	DC-10-3-30	DC-14-3-30	DC-14-4-36	DC-18-4-36	DC-18-6-44
Height (mm)	30.5	45.7	45.7	76.2	76.2	91.4	91.4	111.8
Diameter (mm)	5.2	15.2	25.4	25.4	35.6	35.6	45.7	45.7
Filtration Area (cm^2)	307.7	307.7	956.3	889.3	1862.1	1781.1	3078.2	2838.7
Amount of Silica gel (kg)	2.722	4.08	12.25	18.14	40.82	44	88.45	94.35
Adsorption Capacity (litres)	0.85	1.80	4.16	7.19	15.14	17.88	29.53	32.93
Max. Flow Rate @1 PSID (cfm)	100	100	100	250	250	500	500	900
Filtration (µ absolute)	3							
Op. Temp. Range	-28.9° to 121°C							
Hydrophilic Agent	Silica Gel							
Connection Size (NPT)	2"	2"	2"	3"	3"	4"	4"	6"

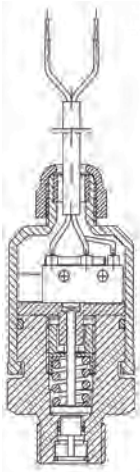

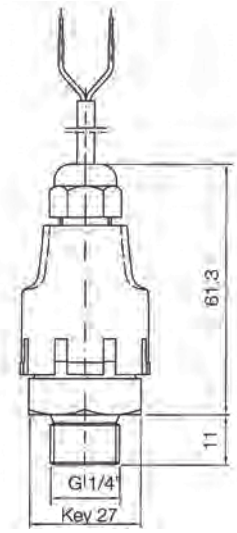

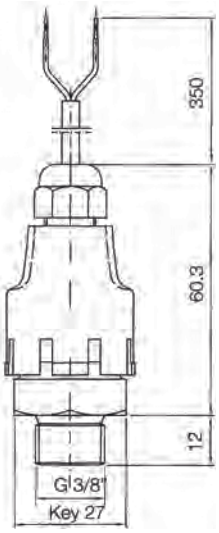

Description

The pressure switch type KT is a pressure controlled electric switch, consisting of a piston activated microswitch with silver contacts. The pressure switch is factory pre-set to ordered pressure and not possible to re-adjust.

Operation

KT 32 disconnects the power when pressure rises (NC).
KT 33 connects when pressure rises (NO).
KT 34 switching when pressure rises/falls.

Features

- High pressure range
- Withstands high pressure water spraying
- High reliability
- Tested to over 1 x 10^{6} pressure cycles
- High bursting pressure
- Built in microswitch with silver contacts
- Piston type

Performance Data	
Maximum working pressure	400 bar
Maximum peak pressure	1000 bar
Tolerance setting	up to 50 bar, +10% over 50 bar, +5 bar
Protective class	IEC 529: IP 66. IP 67, DIN40050: IP69K
Pressure medium temperature	-40°C to 100°C
Ambient temperature	-40°C to 85°C
Electric specification	28 VDC: 3A inductive load, 5A resistive load 250 VAC: 5A
Pressure range	between 2 and 350 bar can be ordered
Medium	mineral or synthetic based hydraulic fluids (with std. NBR seal)
Installation	**Important:** Fixed setting. Will break at attempt to adjust.

Symbols

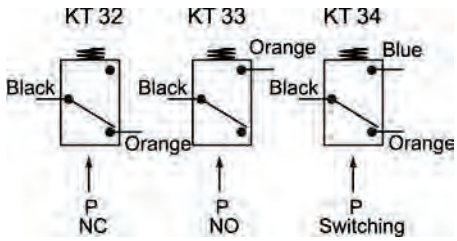

Optional electrical connection

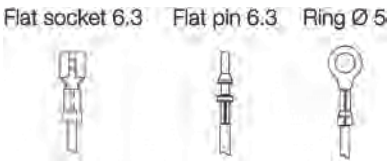

For other combinations, electrical connections or special requirements, please contact:
jbj Techniques Limited technical office
tel: 01737 767493
email: info@jbj.co.uk

Ordering Code

	(1) (2)				
G$^{3}/_{8}$" thread:	**30260 - 00 - XXX**	(1) = Type	00 NC (KT32)	(2) =	Pressure set at XXX bar
G$^{1}/_{4}$" thread:	**30355 - 02 - XXX**		01 NO (KT33)		

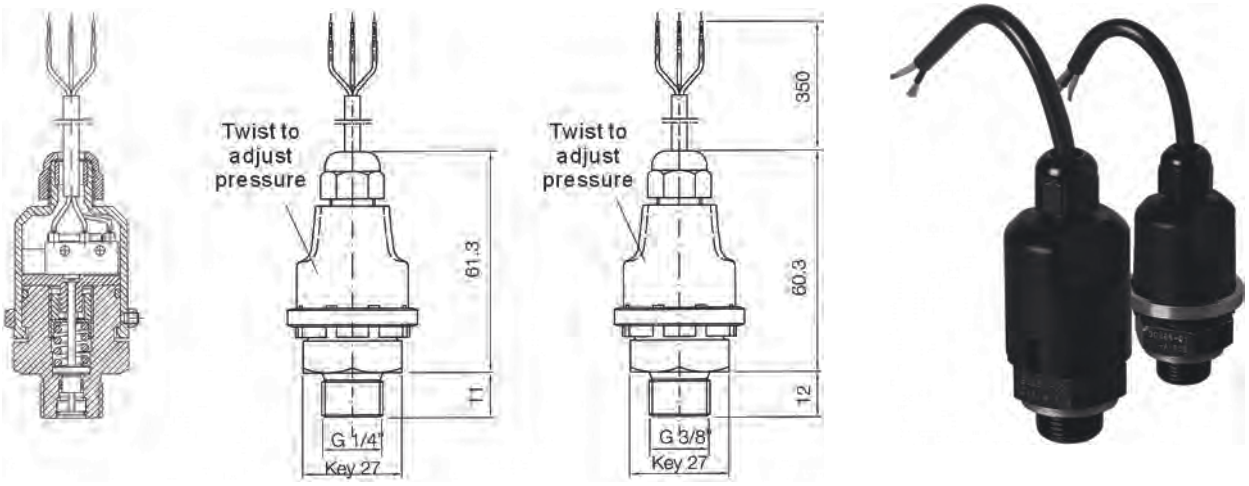

Description

The pressure switch type KT 35 is a pressure controlled electric switch, consisting of a piston activated microswitch with silver contacts. The pressure is field adjustable within the pressure range.

Operation

KT 35 switching when pressure rises/falls. To adjust pressure setting, untighten locking screw and twist upper part to desired pressure and then tighten the locking screw.

Features

- High pressure range
- Withstands high pressure water spraying
- High reliability
- Tested to over 1 x 10^{6} pressure cycles
- High bursting pressure
- Built in microswitch with silver contacts
- Piston type

Performance Data	
Maximum working pressure	400 bar
Maximum peak pressure	1000 bar
Tolerance setting	up to 50 bar, +10% over 50 bar, +5 bar
Protective class	IEC 529: IP 66. IP 67, DIN40050: IP69K
Pressure medium temperature	-40°C to 100°C
Ambient temperature	-40°C to 85°C
Electric specification	28 VDC: 3A inductive load, 5A resistive load 250 VAC: 5A
Pressure range	between 25 - 150 bar and 100 - 350 bar and 10 - 35 bar
Liquid	mineral or synthetic based hydraulic fluids (with std. NBR seal)
Installation	no restrictions

Symbols

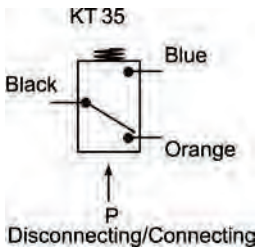

Optional electrical connection

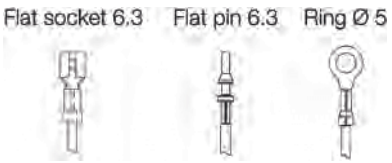

For other combinations, electrical connections or special requirements, please contact **jbj Techniques Limited technical office, tel: 01737 767493 or email: info@jbj.co.uk**

Ordering Code

	① ②			
G$^{3}/_{8}$" thread:	**30325 - 00 - XXX**	① = Type	00 = 25 - 150 bar	② = Pressure set at XXX bar
G$^{1}/_{4}$" thread:	**30356 - 02 - XXX**		01 = 100 - 350 bar	
			02 = 10 - 35 bar	

jbj Techniques is a specialist supplier of high-quality products for the mechanical power transmission and fluid power sectors. The company offers a high level of in-house expertise plus a huge selection of products to meet a very broad range of customer applications. From specification, through technical advice and manufacture to after-sales support, jbj Techniques provides a comprehensive and valued service to the power transmission and hydraulics industries. The company fields a UK-wide team of technical sales engineers to ensure that the business is close to its customers, and it enjoys excellent associations with European manufacturers, acting as sole UK distributor in many cases.

jbj's team is recognised for its expertise in the selection and configuration of hydraulic and mechanical transmission systems. Able to draw on an extensive product range that provides the building blocks for bespoke systems both large and small, the in-house design team offers a complete service, ranging from an assessment of customer requirements to full technical backup, including product specification, CAD based system design, system build and certification. Moreover customers can take advantage of jbj's own machine-shop facilities and skilled engineers to guarantee quality and control costs.

jbj Techniques provides one of the widest ranges of couplings available within the UK; mechanical power transmission couplings for a vast range of applications. Ranging from miniature couplings, all steel gear couplings, flexible spider couplings, shaft couplings, torque limiting couplings, disc and grid type couplings, ATEX compliant and shaft locking devices. Magnetic couplings for power transmission between hermetically sealed areas. However as extensive as the selection is, couplings make up a fraction of jbj's portfolio. As power transmission specialists the company stock and provide gearboxes, clutches, pumps, hydraulic motors, flow meters, fluid power accessories including: cooling & heat exchange products, reservoirs, pipe flanges, seals and level indicators, as well as a variety of bellhousings and engine adaptors, to name just a few of the product categories.

jbj Techniques Limited is proud of it's relationship and reputation with customers and suppliers. The core client base is stable and loyal, which is testament to the quality of service provided by the company. A similar relationship exists with suppliers, ensuring a continuing high quality service in which customers can have complete confidence.

Bellhousings

Torsionally Flexible Couplings

Torsionally Rigid Couplings

Torsional Couplings

Anti-static/Flameproof Couplings

Tyre Couplings

Torque Limiting Couplings

Permanent Magnetic Couplings

Hydraulic Adaptors

Engine Adaptor Kits

Dampers

from
Small Individual Components to
Large Combinations

"ensuring a continuing high quality service in which customers can have complete confidence."

jbj TECHNIQUES LIMITED

an excellence in engineering

comprehensive range of components www.jbj.co.uk

Gear Pumps/Motors

Screw Pumps

Axial & Radial Piston Motors

LSHT Motors/Geared Motors

Vane Pumps

Splitter Gearboxes

Pneumatic Motors & Starters

BD Clutches & Gearboxes

BDS Clutches

Planetary Gearboxes

Coolers

Oil Bath Clutches

Flow Dividers

Tanks/Accessories

Fluid Level Indicators

Flanges

Mini Power Packs

Pressure Intensifiers

quality products for mechanical & fluid power

01737 767493 info@jbj.co.uk www.jbj.co.uk

jbj Techniques Limited is ISO certificated, committed to international coordination & unification of industrial standards.

- registered in England No: 1185469 -

A range of products ATEX certificated to directive 94/9/E requirements

jbj TECHNIQUES LIMITED

jbj Techniques Limited
28 Trowers Way Holmethorpe Industrial Estate
Redhill Surrey RH1 2LW. UNITED KINGDOM

quality products for mechanical & fluid power

01737 767493 info@jbj.co.uk www.jbj.co.uk

jbj Techniques Limited is ISO certificated, committed to international coordination & unification of industrial standards.

registered in England No: 1185469

A range of products ATEX certificated to directive 94/9/EC requirements

set by James Harris, jbj Techniques Limited